CEDRAL	Scale NTS	By ...	Date Feb 2023	Dwg N° IETEX_ABT-03-LR
	This drawing is © Copyright of Etex Group. It must not be reproduced or altered in any part. This information is supplied in good faith but no liability can be accepted for any loss or damage resulting from use. Cedral and logos are trademarks of Etex NV or an affiliate thereof. Any use without authorisation is strictly prohibited and may violate trademark laws.		Drawing Title - Abutment Gutter LR Breather Membrane Counter Battened
Cedral Slates - With (LR) Breather Membrane	Rev. ...		Breather membranes (Low Resistent) Must be counter battened as per requirements of BS 5250:2011, See BS 5534, S.R. 82:2017 for best code of practice

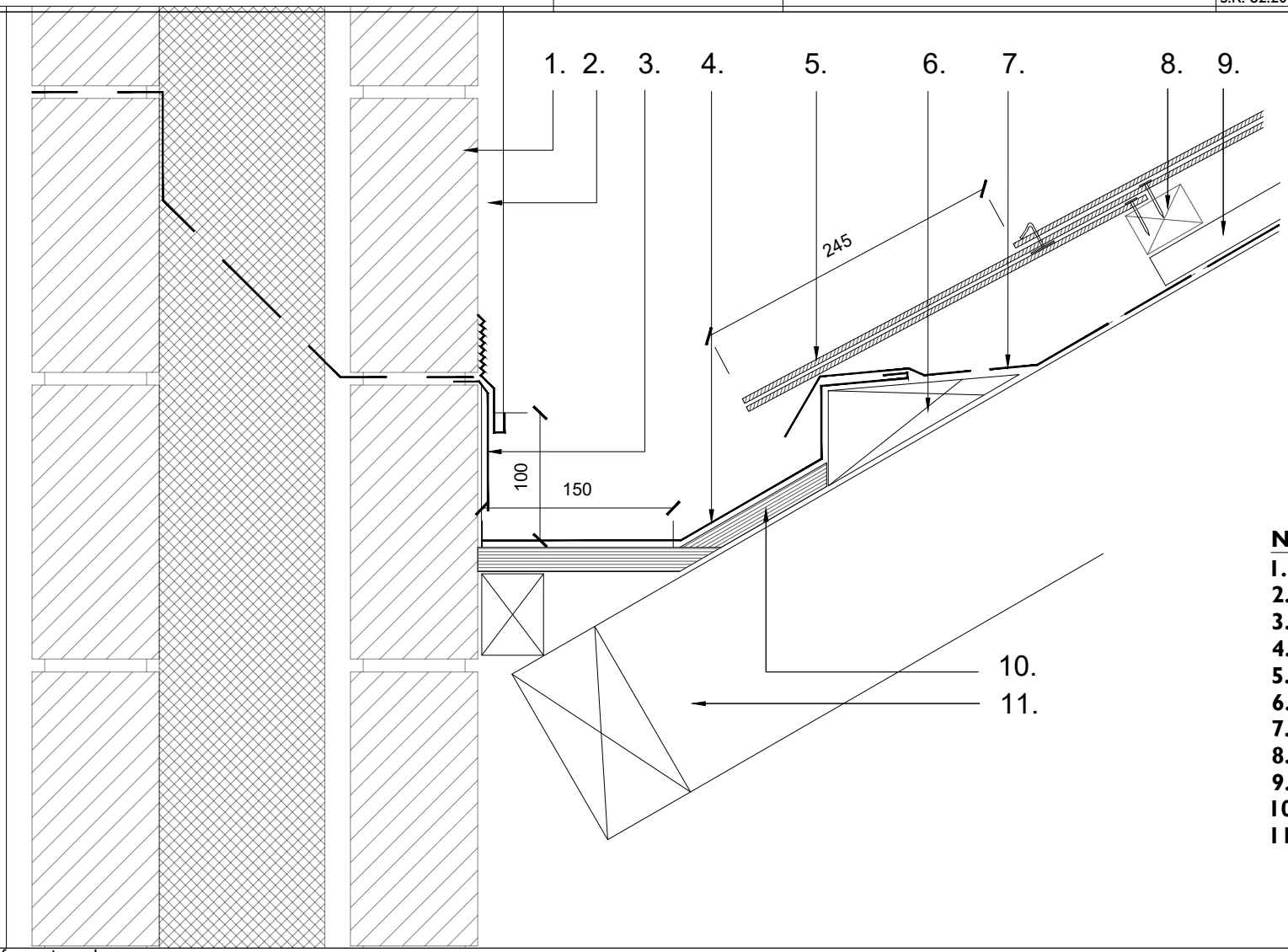

Notes and Specification

1. **Cavity wall**
2. **Render**
3. **Metal flashing**
4. **Gutter lining**
5. **Slates**
6. **Tilting fillet**
7. **Underlay**
8. **Slating batten**
9. **Counterbattens**
10. **Support to metal gutter**
11. **Truss/Rafter**

For further information, please contact;
Website: www.cedral.world
Email: info.europanels@etexgroup.com

etex inspiring ways of living